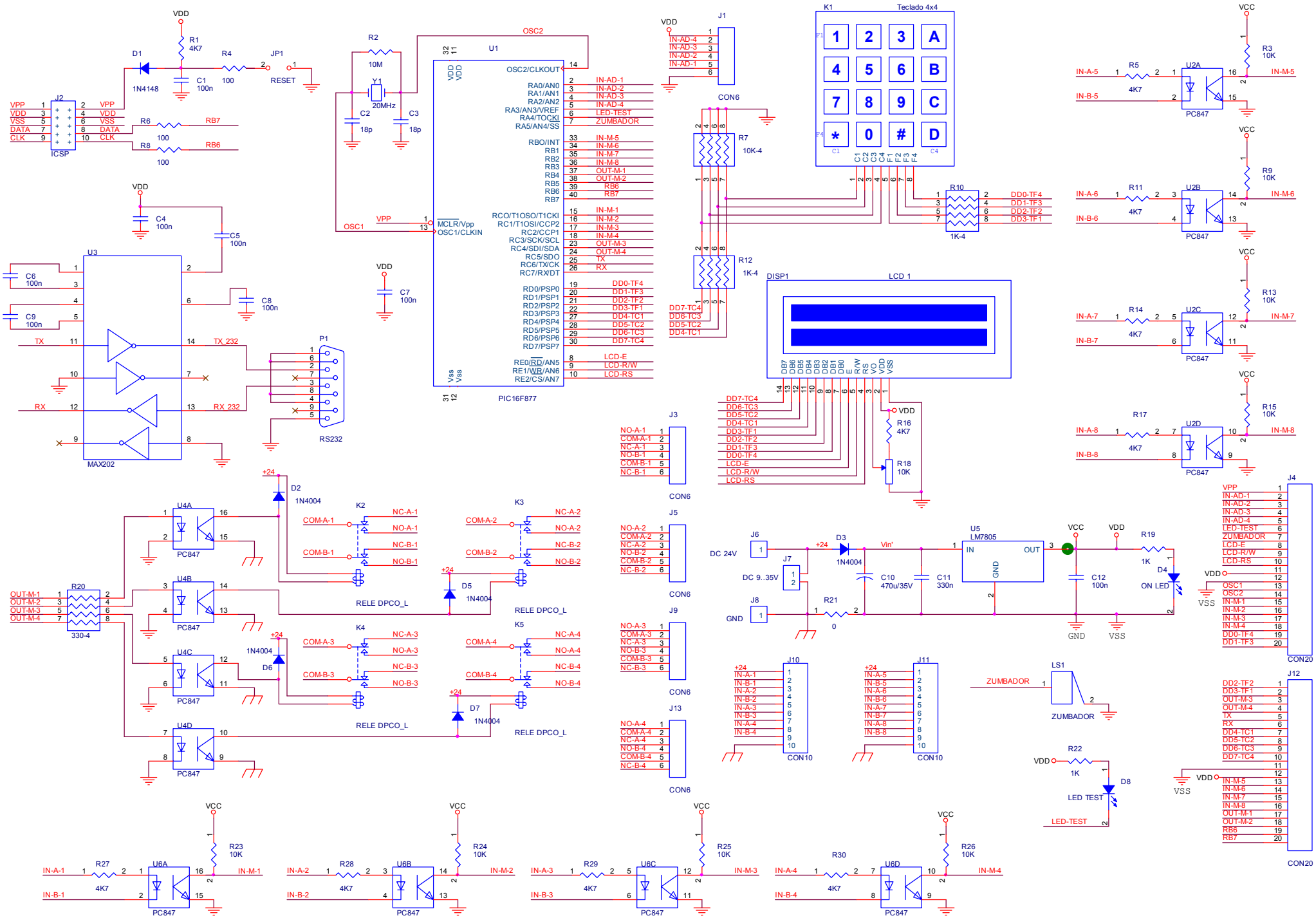
VDD
R1 4K7
D1 1N4148
C1 100n
R4 100
JP1
RESET
J2
ICSP
VPP
VDD
VSS
DATA
CLK
R6 100
R8 100
RB7
RB6
R2 10M
Y1 20MHz
C2 18p
C3 18p
OSC2
OSC1
U1
PIC16F877
OSC2/CLKOUT
RA0/AN0
RA1/AN1
RA2/AN2
RA3/AN3/VREF
RA4/TOCKI
RA5/AN4/SS
RBO/INT
RB1
RB2
RB3
RB4
RB5
RB6
RB7
RCO/T1OSO/T1CKI
RC1/T1OSI/CCP2
RC2/CCP1
RC3/SCK/SCL
RC4/SDI/SDA
RC5/SDO
RC6/TX/CK
RC7/RX/DT
RD0/PSP0
RD1/PSP1
RD2/PSP2
RD3/PSP3
RD4/PSP4
RD5/PSP5
RD6/PSP6
RD7/PSP7
RE0/RD/AN5
RE1/WR/AN6
RE2/CS/AN7
MCLR/Vpp
OSC1/CLKIN
IN-AD-1
IN-AD-2
IN-AD-3
IN-AD-4
LED-TEST
ZUMBADOR
IN-M-5
IN-M-6
IN-M-8
OUT-M-1
OUT-M-2
OUT-M-3
OUT-M-4
IN-M-1
IN-M-2
IN-M-3
IN-M-4
TX
RX
DD0-TF4
DD1-TF3
DD2-TF2
DD3-TF1
DD4-TC1
DD5-TC2
DD6-TC3
DD7-TC4
LCD-E
LCD-R/W
LCD-RS
J1
CON6
K1
Teclado 4x4
R7 10K-4
R12 1K-4
R10 1K-4
DISP1
LCD 1
R16 4K7
R18 10K
C4 100n
C5 100n
C6 100n
C7 100n
C8 100n
C9 100n
U3
MAX202
TX_232
RX_232
P1
RS232
R20
330-4
U4A
U4B
U4C
U4D
PC847
D2 1N4004
D5 1N4004
D6 1N4004
D7 1N4004
K2
K3
K4
K5
RELE DPCO_L
J3
J5
J9
J13
NO-A-1
COM-A-1
NC-A-1
NO-B-1
COM-B-1
NC-B-1
NO-A-2
COM-A-2
NC-A-2
NO-B-2
COM-B-2
NC-B-2
NO-A-3
COM-A-3
NC-A-3
NO-B-3
COM-B-3
NC-B-3
NO-A-4
COM-A-4
NC-A-4
NO-B-4
COM-B-4
NC-B-4
J6
DC 24V
J7
DC 9..35V
J8
GND
D3 1N4004
Vin'
C10 470u/35V
C11 330n
U5 LM7805
IN
OUT
GND
C12 100n
R19 1K
D4 ON LED
R21 0
J10
CON10
J11
CON10
LS1
ZUMBADOR
R22 1K
D8
LED TEST
LED-TEST
J4
CON20
J12
CON20
R3 10K
R9 10K
R13 10K
R15 10K
R5 4K7
R11 4K7
R14 4K7
R17 4K7
U2A
U2B
U2C
U2D
IN-A-5
IN-B-5
IN-A-6
IN-B-6
IN-A-7
IN-B-7
IN-A-8
IN-B-8
R23 10K
R24 10K
R25 10K
R26 10K
R27 4K7
R28 4K7
R29 4K7
R30 4K7
U6A
U6B
U6C
U6D
IN-A-1
IN-B-1
IN-A-2
IN-B-2
IN-A-3
IN-B-3
IN-A-4
IN-B-4
IN-M-1
IN-M-2
IN-M-3
IN-M-4
+24
VCC